# DPF SYSTEM (DIESEL PARTICULATE FILTER)

This is a mechanical filter that "traps" the carbon particles (particulate) and the engine oil ashes in the exhaust gases in diesel engines.
The action of the DPF makes it possible to keep carbon particle levels down by around 90% in line with the Euro 5 regulation.

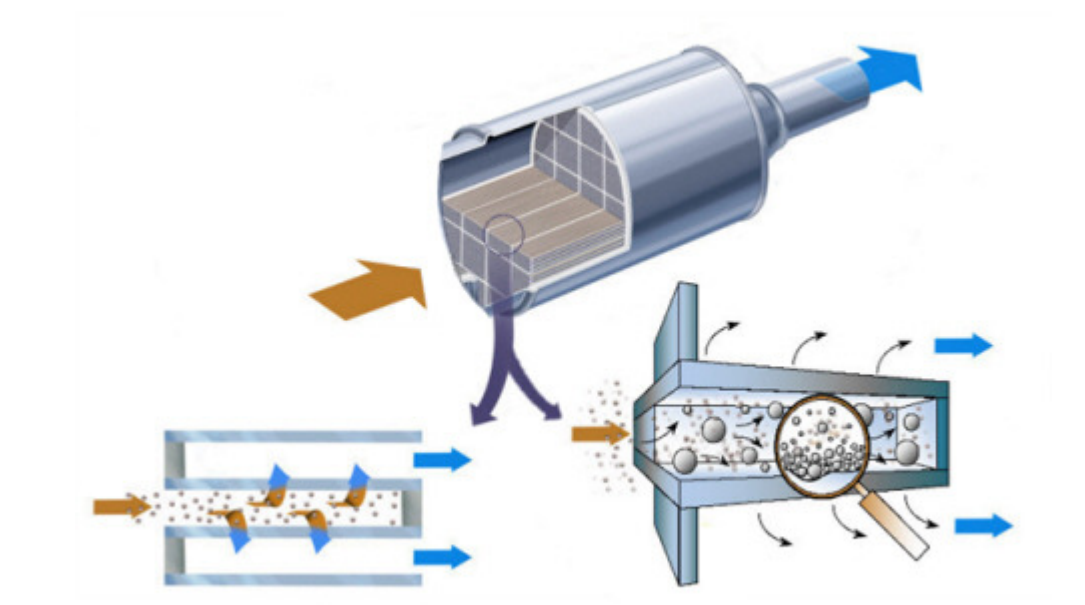

The operation of the DPF system is managed by the engine control unit by means of suitable strategies.
In addition to the actual filter the DPF system comprises an exhaust gas temperature sensor and a differential pressure sensor.
The differential pressure sensor measures the pressure of the exhaust gases upstream and downstream of the filter, by means of special pipes, signalling the gradual accumulation of particulate to the control unit.
The particulate accumulation process and the relative increase in the pressure of the exhaust gases inside the filter depends on the engine load, the weight of the vehicle and the engine capacity and power.
Therefore the particulate needs to be removed on a regular basis, regenerating the filter following a procedure that makes use of multiple fuel injections to increase the temperature of the exhaust gases (about 600 °C) and burn the particulate. The regeneration procedure is controlled by the injection control unit which acts: on fuel metering (up to 5 fuel injections in the same engine cycle per cylinder) and on air control (E.G.R. and turbo pressure).
The regeneration phase takes place over a few minutes and does not affect the continuity of the torque supplied by the engine in terms of normal operation.
When the driving profile does not permit automatic regeneration, after several failed attempts, the injection control unit activates a "particle filter blocked" warning light in the control panel.
It is therefore advisable to keep the vehicle running until the "particle filter blocked" warning light goes out.
If the "particle filter blocked" warning light remains on, it is vital to carry out the forced regeneration using the diagnostic equipment Examiner.
If the condition of the particulate filter deteriorates (the accumulation threshold of 250% is exceeded) as well as the "particle filter blocked" warning light, the EOBD warning light will also come on and it is therefore vital to carry out the forced regeneration using Examiner.
It is possible during the regeneration stage that some of the particulate will pollute the engine oil and therefore it must be changed in advance of the programmed interval.
This is signalled by the "minimum engine oil pressure" warning light flashing.
This signalling is controlled by the injection control unit depending on the:
- number of regenerations
- kilometres travelled
- number of engine starting cycles
- number of cold starts
- average value of engine oil temperature
- etc.

After changing the engine oil earlier than planned, connect the Examiner to reset the Service function.

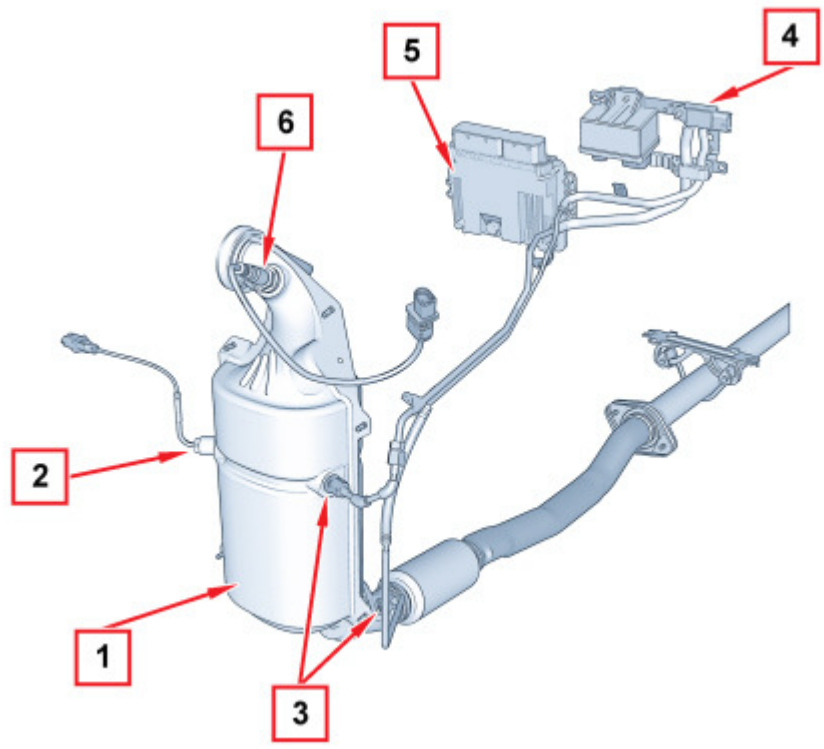


1. Particulate filter
2. Exhaust gas temperature sensor
3. Exhaust gas pressure intake
4. Differential pressure sensor
5. Injection control unit
6. Oxygen sensor

# CATALYTIC CONVERTER

## Features

The catalytic converter is a post-treatment device for oxidizing the CO, HC and particulate, converting them into carbon dioxide (CO2) and water vapour (H2O).
The catalytic converter consists of a ceramic, honeycomb structure (1) with cells impregnated with platinum (2), which catalyzes the oxidation reactions.

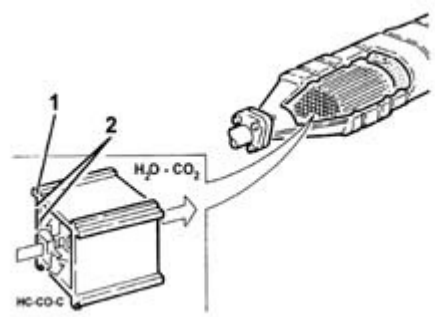


## Operation

The exhaust gases passing through the cells heat the catalyser, triggering the conversion of pollutants into inert compounds.
The oxidising chemical reaction of the CO, HC and particulate is effective at temperatures of between 200 and 350°C.
Actually, above 350°C the sulphur contained in the diesel fuel starts to oxidise, producing sulphur dioxide and sulphur trioxide.

# LAMBDA SENSOR

This sensor is used to measure the oxygen content and the Lambda value (ratio between quantity of intake air and theoretical quantity of air required for complete combustion of fuel injected) in automotive engine exhaust gases.

When the mass of oxygen present coincides with the amount required to burn all the fuel, the mixture is known as stoichiometric and the ratio is 14.6.In this case the Lambda is at the unit value.
The Lambda can be expressed as the ratio between the quantity of intake air and the quantity of air required for the combustion of the fuel injected.
The Lambda values range from 0.65 (rich mixture, shortage of oxygen) to infinite (percentage of oxygen equal to percentage present in the air 20.95% approx).
The value measured by the Lambda sensor is compared with the Lambda value calculated by the engine management control unit and, if necessary, modifications are made to the map for the injectors and the air flow rate meter in order to maintain the operation of the engine and the harmful emissions within legal limits; its operation is therefore to monitor the engine over a period of time.
The sensor works by comparing the concentration of oxygen in the reference cell, housed inside the sensor, with the combustion gas flowing inside the comparison cell next to the reference cell. Depending on the resulting imbalance, the engine management control unit regulates a current signal (lp) that rebalances the oxygen content in the comparison cell through an electrochemical action. The value of lp is proportional to the Lambda value measured according to the graph illustrated below.

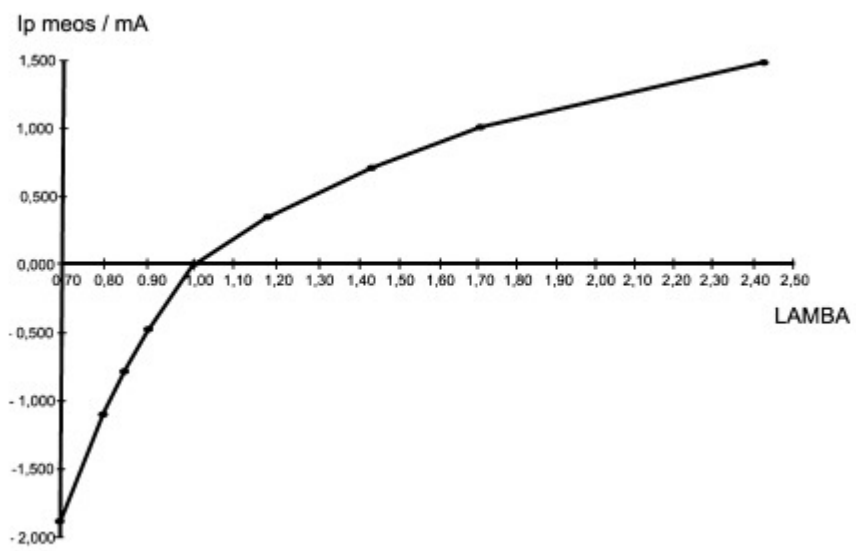


## Sensor structure

The sensitive element is the planar type, the sensor consists of three layers of zirconium oxide and its particular shape allows the sensor to be very compact with low intensity pumping currents which further decreases the power absorption of the sensor.

The sensitive part is protected from the flow of exhaust gases with a cover with two layers with access openings perpendicular to one another.
The diagram below shows an exploded view of a sensor illustrating the various components.

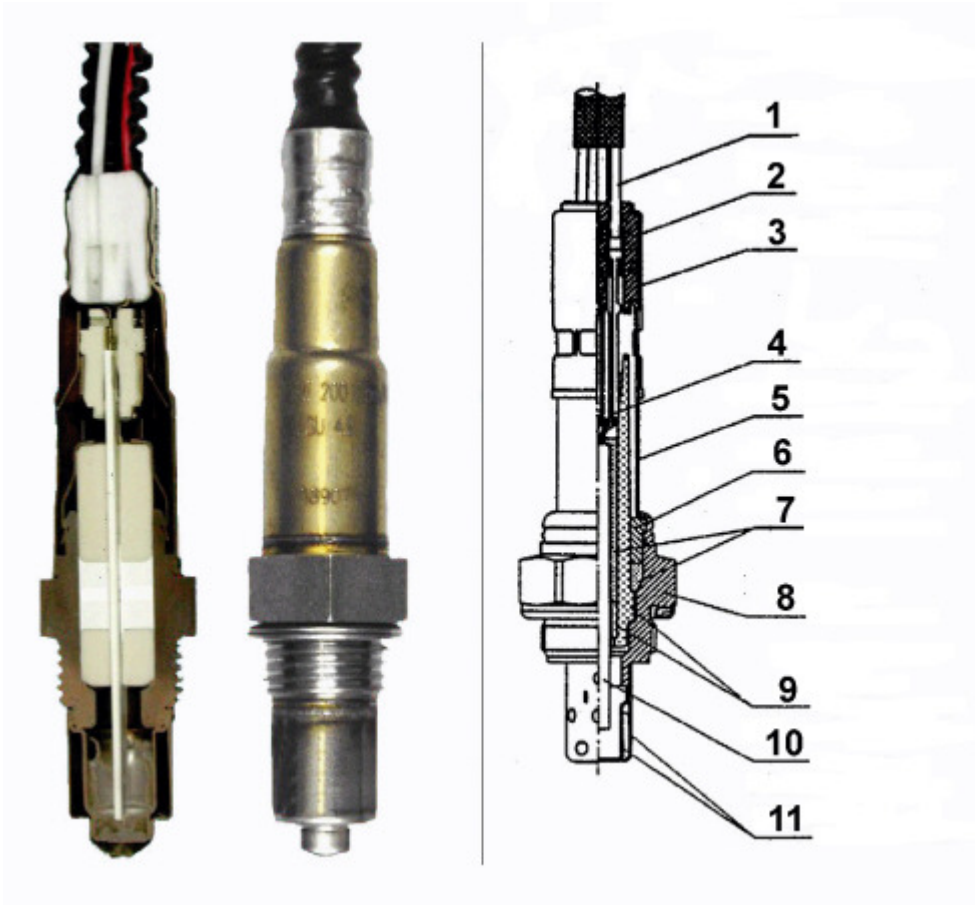


1. Insulated cable
2. Rubber cap
3. Metal cap
4. Glass
5. Metal duct
6. o-ring
7. Sintered products
8. Hexagon
9. Ceramic heater
10. Sensitive element
11. Dual protection pipe

# Features

Heater nominal supply voltage: 7.5 V
Dissipated power at 7.5 V: 7.5 W
Lambda measuring range: from 0.8 to infinity
System tolerance: $\Delta O2/O2$ = +/- 4 %
Exhaust temperature: ≤ 980 °C
Exhaust pressure: ≤ 2.5 bar
Supply: ≥ 10.8 V
Activation time: ≤ 10 s
Potentiometer range: from 30 to 300 Ohm
The Lambda sensor connector is illustrated in the diagram below.

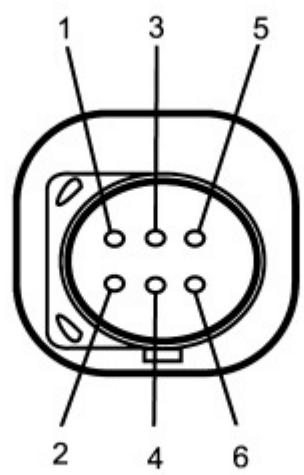


- 1 - Pumping current (lp)
- 2 - Virtual mass
- 3 - Heater (-)
- 4 - Heater (+)
- 5 - Calibration current
- 6 - Nerst voltage